

WL750

Wheel loaders

The versatile machine

These features characterise the WL750 wheel loader: Comfort cabin with excellent ergonomics and 360° visibility, electronically controlled drive system with various operating modes, sturdy load arm with an optimal view of the attachment, large range of options and a modern machine design. The transversely installed engine and the optimised arrangement of components ensure very good maintenance access. The WL750 wheel loader is the ideal model in the wheel loader class with 0.75 m³ bucket volume. It combines power, reliable hydraulics and compact dimensions with well-engineered technology and an excellent price-performance ratio.

MAT: 1000493041

Highlights

- Electronically regulated drive system
- Comfortable Cab
- Transversely mounted motor for optimum service accessibility
- Robust central joint with optimized hose routing
- Service access front end

Technical Data

Standard engine data

Engine manufacturer	Rehlko
Motor type	KDI1903TCR
Cylinder	3
Drive output	42 kW
Drive output	57 PS
at max. rpm	2,600 U/min
Maximum torque	225 Nm
Cylinder capacity	1,861 cm³
Type of coolant	Water
Exhaust standard level	V
Exhaust aftertreatment	DOC/DPF

Electrical system

Operating voltage	12 V
Battery	100 Ah
Alternator	120 A

Weights

Bucket capacity (standard bucket)	0.65 m³
Operating weight	3,670 - 4,170 kg
Tipping load with bucket – machine straight, loading frame horizontal	2,930 - 3,490 kg
Tipping load with bucket – machine pivoted, loading frame horizontal	2,560 - 3,060 kg
Tipping load with pallet fork – machine straight, loading frame horizontal	2,390 - 2,850 kg
Tipping load with pallet fork – machine pivoted, loading frame horizontal	2,100 - 2,500 kg

Driver's cab

Driver's cab	FSD (cabin)

Filling levels

Tank capacity for fuel	80 l
Tank capacity for hydraulic oil	32 l

Drive system

Type of drive	electronically controlled
drive unit	Hydrostatic via transfer gearbox and universal joint shaft
Speed levels	2
Axle	PA1200
Travel speed Standard	0-20 km/h
Travel speed Option 1	0-30 km/h

The illustrations, equipment and data shown may deviate from the current delivery program of your country. Optional equipment subject to additional charge may be shown. Subject to changes.

Copyright © 2026 Wacker Neuson SE | www.wackerneuson.com

Operating brake	drum brake (multi-disk brakes, option)
Parking brake	drum brake (mechanical handbrake lever)
Differential lock	100 % front axle + rear axle

Hydraulic system

Drive hydraulics working pressure (max.)	500 bar
Work hydraulics discharge volume (max.)	56,6 (70,4) l/min
Work hydraulics working pressure (max.)	235 bar

Kinematics

Kinematics type	P
Lifting cylinder	1
Tipping cylinder	1
Quick change system	hydraulic

Steering

Steering type	hydraulically activated articulated pendulum steering
Steering cylinder	1

Noise characteristic values

Average sound power level LwA (operator's canopy)	99.9 dB(A)
Guaranteed sound power level LwA (operator's canopy)	101 dB(A)
Specified sound pressure level LpA (operator's canopy)	70 dB(A)
Average sound power level LwA (cabin)	99.9 dB(A)
Guaranteed sound power level LwA (cabin)	101 dB(A)
Specified sound pressure level LpA (cabin)	69 dB(A)

Other information

FSD = operator's canopy
DPF = diesel particulate filter
DOC = diesel oxidation catalyst
Tipping load calculation according to ISO 14397

The illustrations, equipment and data shown may deviate from the current delivery program of your country. Optional equipment subject to additional charge may be shown. Subject to changes.

Copyright © 2026 Wacker Neuson SE | www.wackerneuson.com

Dimensions

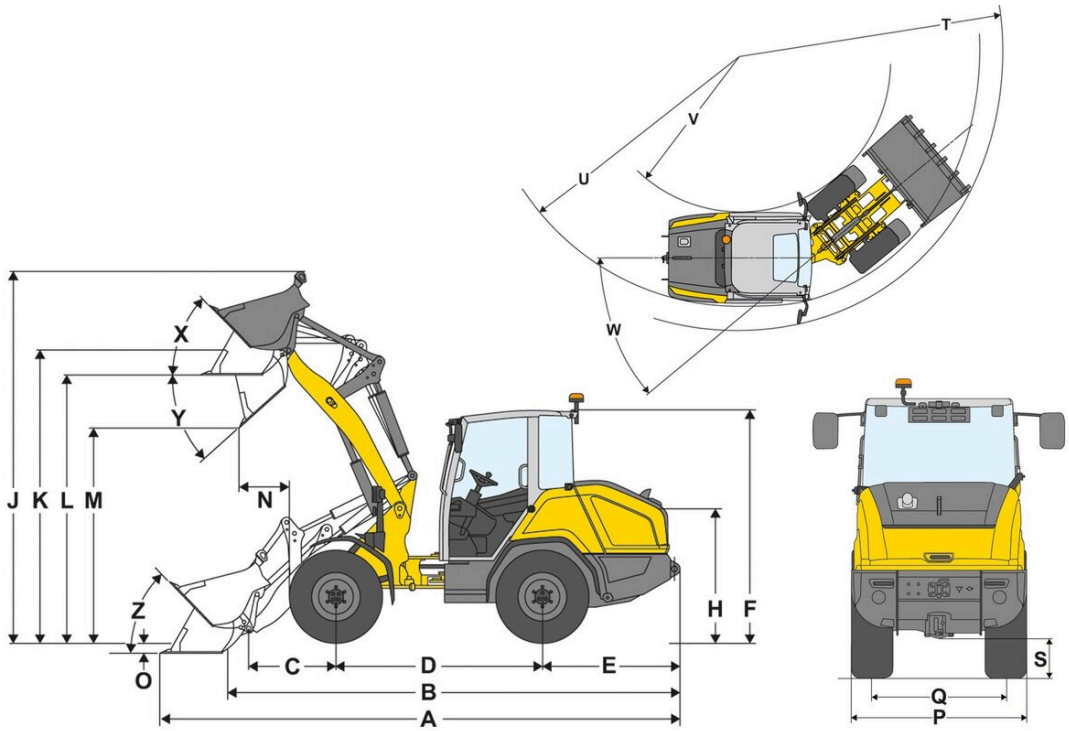

A	Total length	5,420 mm
B	Total length without bucket	4,610 mm
C	Bucket pivot point (to center of axle)	910 mm
D	Wheel base	2,150 mm
E	Rear overhang	1,435 mm
F	Height with cab	2,415 mm
	Height with lowered operator's canopy	2,335 mm
F	Height with operator's canopy raised	2,415 mm
H	Seat height	1,390 mm
J	Total working height	3,865 mm
K	Bucket pivot point (max. lift height)	3,040 mm
L	Load-over height	2,780 mm
M	Dumping height	2,230 mm
N	Reach (at M)	540 mm
O	Digging depth	115 mm
P	Total width	1,465 mm
Q	Track width	1,170 mm
S	Ground clearance	335 mm
T	Maximum external radius	4,165 mm
U	Radius on the outer edge	3,850 mm
V	Inner radius	2,240 mm
W	Articulation angle	40 °
X	Rollback angle at max. lift height	45 °
Y	Dumping angle	42 °
Z	Rollback angle on ground	46 °

The illustrations, equipment and data shown may deviate from the current delivery program of your country. Optional equipment subject to additional charge may be shown. Subject to changes.

Copyright © 2026 Wacker Neuson SE | www.wackerneuson.com