

1601

Wheel Dumper

Three types of skips, even more versatility

The 1601 is a true multi-functional machine with its price-performance ratio and impressive three possible skip versions. It manages confined spaces effortlessly. Leg protection, the fold-down roll over protection system, and optionally available rotating beacon, reverse alarm and outside rear-view mirrors minimize risk factors for accidents and maximize the safety of the operator. The efficient hydrostatic drive system ensures intuitive and simple operation.

MAT: 1000145387

Highlights

- Articulated pendulum joint
- Swivel tip skip
- High tip skip

Technical Data

Hydraulic

Hydraulicpump	ZRP
Flow rate	18.0 l/min

Mechanical - Output Details

Travel speed	16.0 km/h

Mechanical Details

Length	3,310.0 mm
Width	1,305.0 mm
Height	2,550.0 mm
Weight	1,810.00 kg
Payload	1,500.0 kg
Skip capacity levelled	829.0 l
Skip capacity heaped	1,044.0 l
Pendulum angle	15.0 °
Operating weight (min.-max.)	1,336.0 kg

Engine

Engine type	Diesel engine
Cylinder capacity	1,116.0 cm³
Fuel	HVO EN15940
Effective power	18.9 kW
Nominal Engine speed	3,000.0 1/min
Standard (Effective power)	ISO 3046
Engine Manufacturer	Yanmar
Engine Designation	3TNV76-XNSV

Environment Data

Sound power LWA, guaranteed	101.0 dB(A)

Chassis

Turning radius	3,300.0 mm
Articulation angle	33.0 °
Hydraulik Pump	Axialpistonpump
Flow rate	84.0 l/min

Shipping and Storage

Shipping weight	1,261.0 kg

The illustrations, equipment and data shown may deviate from the current delivery program of your country. Optional equipment subject to additional charge may be shown. Subject to changes.

Copyright © 2026 Wacker Neuson SE | www.wackerneuson.com

Dimensions

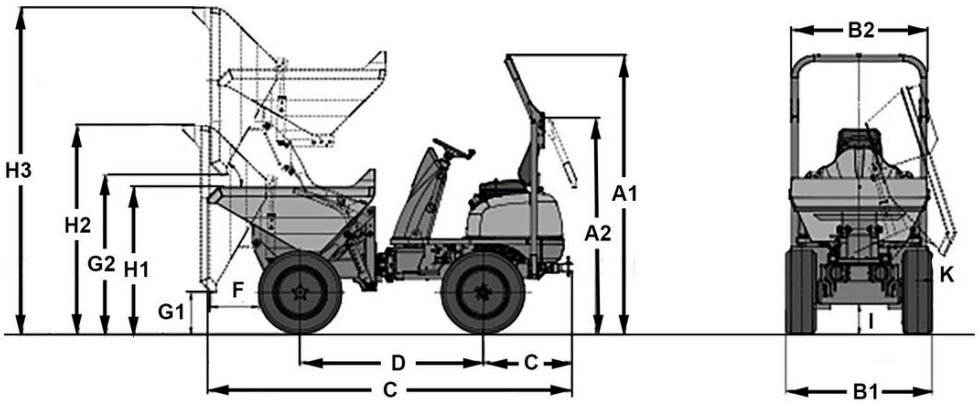

		Front tip skip	Drehkippmulde	High tip skip
A1	Height ROPS	2,550 mm	2,550 mm	2,550 mm
A4	Height of ROPS tilted	1,960 mm	2,000 mm	2,000 mm
B3	Width of vehicle	1,305 mm	1,305 mm	1,305 mm
B4	Width of skip	1,300 mm	1,260 mm	1,200 mm
D1	Wheel base	1,700 mm	1,700 mm	1,650 mm
E1	Rear overhang	810 mm	810 mm	810 mm
F1	Dumping width	370 mm	280 mm	400 mm
G1	Dumping height max.	360 mm	705 mm	370 mm
G2	Dumping height max., high tip skip raised			1,600 mm
H1	Skip height	1,345 mm	1,310 mm	1,345 mm
H2	Skip height tilted	1,970 mm	2,240 mm	1,895 mm
H3	Skip height tilted, high tip skip raised			2,975 mm
I1	Ground clearance		270 mm	270 mm
K1	Dumping width lateral		100 mm	

The illustrations, equipment and data shown may deviate from the current delivery program of your country. Optional equipment subject to additional charge may be shown. Subject to changes.

Copyright © 2026 Wacker Neuson SE | www.wackerneuson.com