

SM120

Utility Track Loader, Productivity Package

Do More with Less

The SM120 uses Wacker Neuson's ergonomic mini-loader controls, while maintaining operator comfort features such as padding and a spring suspension for a better ride and added stability. The productivity package puts major workgroup controls literally at the operator's finger tips, allowing for function shifting on the fly. The high hinge pin of the SM120 provides a 5'3" bucket dump height and allows for easy loading into high sided trucks and dumpsters. The wide (11") track width provides among the lowest ground pressures on the market, minimizing incidental damage to the work site.

Highlights

- All Day Comfort
- Extra Wide Tracks
- Switch Functions On the Fly
- Ride Control

Technical Data

Hydraulic

flow rate	49.0 l/min
Auxiliary relief pressure	227.0 bar

Mechanical - Output Details

Ground Pressure(Standard track	0.3 bar
Travel speed	8.4 km/h

Mechanical Details

Length without Bucket	2,141.0 mm
Length with Bucket	2,742.0 mm
Overall width without bucket	1,041.0 mm
Height	1,478.0 mm
Bucket Hinge Pin Height	2,176.0 mm
Bucket roll back at ground	25.0 °
Bucket roll back at height max	92.0 °
Angle of departure	25.0 °
Bucket height at height max.	1,595.0 mm
Buck. dump angle at height max	42.0 °
Operating weight	1,703.0 kg
Ground clearance	198.0 mm
Length of Track on Ground	1,093.0 mm
Dump reach at max. height	557.0 mm
Track Width	280.0 mm

Engine

Cooling	Water-cooling
Engine type	Diesel engine
Cylinder	3.0
Cylinder capacity	1,266.0 cm³
Power rating max.	18.5 kW
Operating power	18.4 kW
Operating Engine speed	2,600.0 1/min
Maximum torque	85.0 Nm
Engine Manufacturer	Yanmar
Engine Designation	3TNV80 FT

Operating Fluids

Fuel Tank capacity	64.0 l

Chassis

Tip Load	1,589.0 kg
Rated Operating Capacity at 50% Tip Load	795.0 kg
Rated Operating Capacity at 35% Tip Load	556.0 kg

The illustrations, equipment and data shown may deviate from the current delivery program of your country. Optional equipment subject to additional charge may be shown. Subject to changes.

Copyright © 2026 Wacker Neuson SE | www.wackerneuson.com

Available engines

Yanmar 3TNV80 FT

Cooling	Water-cooling
Engine type	Diesel engine
Cylinder	3
Cylinder capacity	1,266 cm^3
Power rating max.	18.5 kW
Maximum torque	85 Nm
Engine Manufacturer	Yanmar
Engine Designation	3TNV80 FT

The illustrations, equipment and data shown may deviate from the current delivery program of your country. Optional equipment subject to additional charge may be shown. Subject to changes.

Copyright © 2026 Wacker Neuson SE | www.wackerneuson.com

Dimensions

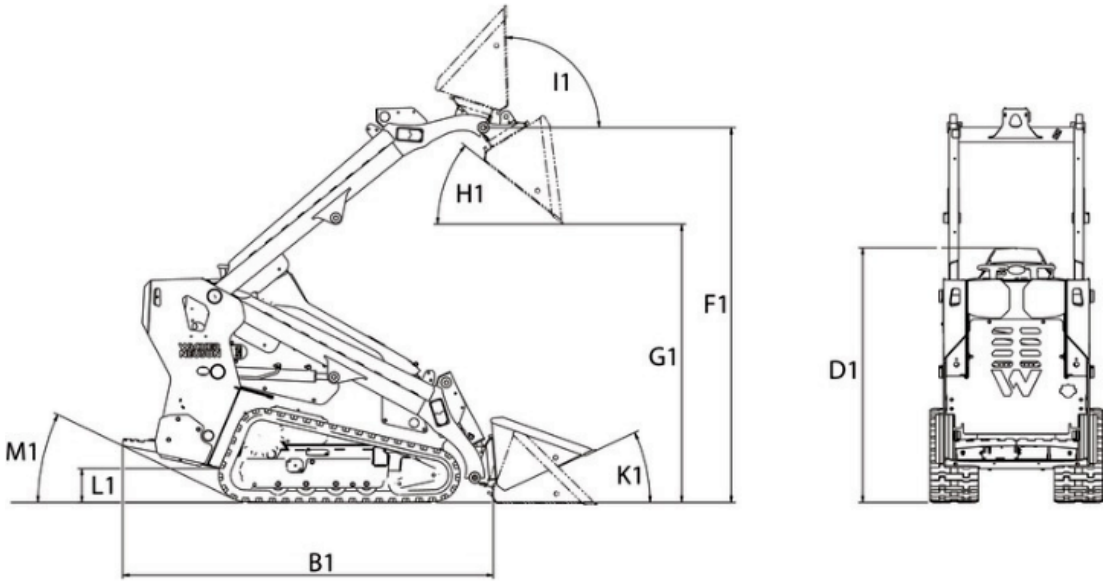

B1	Overall length without bucket	2,150.2 mm
D1	Overall height	1,478 mm
F1	Hinge pin height	2,175 mm
G1	Dump height max.	1,615.1 mm
K1	Bucket rollback at ground level	25 °
I1	Bucket rollback at max. stroke height	92 °
H1	Dump angle	38.2 °
L1	Ground clearance	196.9 mm
M1	Angle of departure	25.6 °

The illustrations, equipment and data shown may deviate from the current delivery program of your country. Optional equipment subject to additional charge may be shown. Subject to changes.

Copyright © 2026 Wacker Neuson SE | www.wackerneuson.com