

T6025

Telehandlers

Technical data

Standard engine data

Engine manufacturer	Perkins
Motor type	404J-E22T
Cylinder	4
Drive output	45 kW
Drive output	60.3 HP
at max. rpm	2,400 rpm
Cylinder capacity	135.2 in³
Type of coolant	Water
Exhaust standard level	V
Exhaust aftertreatment	DOC/DPF
Average sound power level LwA (cabin)	94 dB(A)
Guaranteed sound power level LwA (cabin)	97 dB(A)
Specified sound pressure level LpA (cabin)	70 dB(A)

Engine data Option 1

Engine manufacturer	Perkins
Motor type	404J-E22TA
Cylinder	4
Drive output	55 kW
Drive output	73.8 HP
at max. rpm	2,400
Cylinder capacity	135.2 in³
Type of coolant	Water
Exhaust standard level	V
Exhaust aftertreatment	DOC/DPF
Average sound power level LwA (cabin)	95.6 dB(A)
Guaranteed sound power level LwA (cabin)	97 dB(A)
Specified sound pressure level LpA (cabin)	71 dB(A)

Electrical system

Operating voltage	12 V
Battery	77 Ah
Alternator	120 A

Weights

Payload (max.)	5,512 lb
Operating weight	10,252 lb

Driver's cab

Driver's cab	Cab

Filling levels

Tank capacity for fuel	25.10 US gal
Tank capacity for hydraulic oil	7.66 US gal

Drive system

Type of drive	ecDrive (Electronic Controlled Drive)
drive unit	hydrostatic via transfer gearbox and universal joint shaft
Speed levels	2
Axle	PAL 1660
Travel speed Standard	0-12.43 mph
Travel speed Option 1	0-15.53 mph
Travel speed Option 2	0-21.75 mph
Operating brake	disc brake
Parking brake	disc brake
Differential lock	100% front axle

Hydraulic system

Drive hydraulics working pressure (max.)	5,947 (6,817) psi
Work hydraulics discharge volume (max.)	19.81 gpm
Work hydraulics working pressure (max.)	3626 psi

Kinematics

Lifting cylinder	1

The illustrations, equipment and data shown may deviate from the current delivery program of your country. Optional equipment subject to additional charge may be shown. Subject to changes.

Copyright © 2026 Weidemann | www.weidemann.de

Tipping cylinder	1
Quick change system	Mechanical (hydraulically activated)

Steering

Steering type	Hydrostatic all-wheel steering with end position synchronization
Steering cylinder	2
Steering angle max.	2x38 degree
Oscillating angle of the rear axle	± 8 degree

Other information

DPF = diesel particulate filter
DOC = diesel oxidation catalyst
SCR = selective catalytic reduction

The illustrations, equipment and data shown may deviate from the current delivery program of your country. Optional equipment subject to additional charge may be shown. Subject to changes.

Copyright © 2026 Weidemann | www.weidemann.de

Dimensions

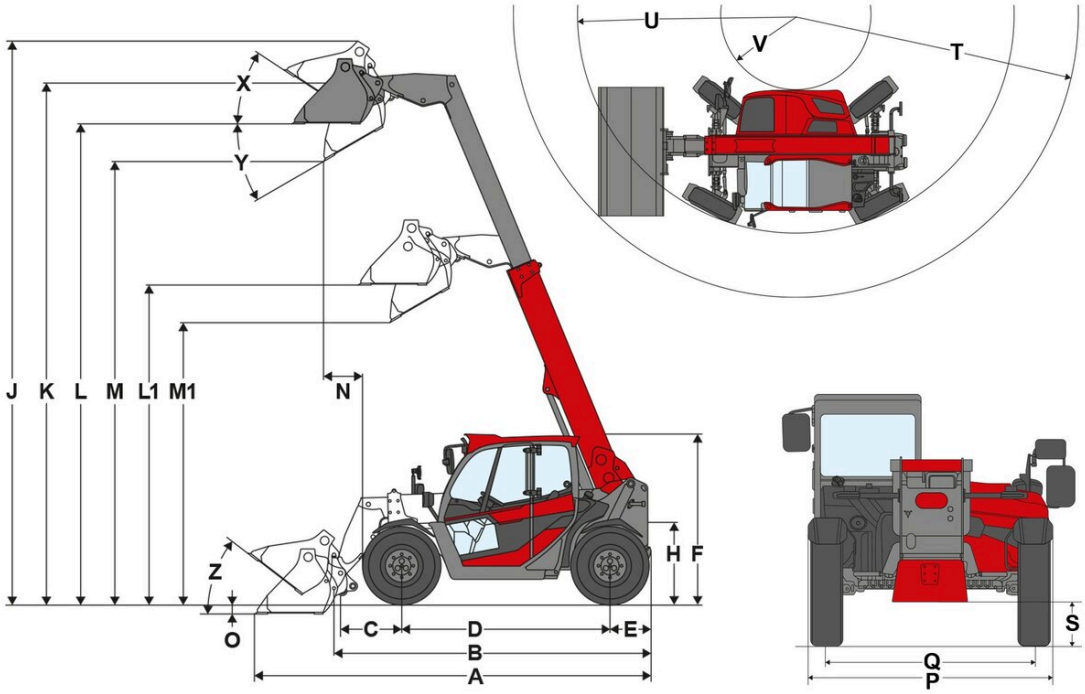

A	Total length	183.7 in
B	Total length without bucket	153.0 in
C	Bucket pivot point (to center of axle)	28.3 in
D	Wheel base	96.4 in
E	Rear overhang	19.2 in
F	Height with cab	78.5 in
H	Seat height	37.7 in
J	Total working height	260.6 in
K	Bucket pivot point (max. lift height)	241.1 in
L1	Load-over height telescopic arm retracted	147.5 in
L	Load-over height telescopic arm extended	222.1 in
M1	Dumping height telescopic arm retracted	130.2 in
M	Dumping height telescopic arm extended	204.8 in
N	Reach (at M)	17.9 in
O	Digging depth	4.8 in
P	Total width	74.8 in
Q	Track width	65.4 in
S	Ground clearance	11.2 in
T	Maximum radius	170.7 in
U	Radius on the outer edge	131.8 in
V	Inner radius	45.7 in
X	Rollback angle at max. lift height	34 °
Y	Dumping angle	30 °
Z	Rollback angle on ground	38 °

The illustrations, equipment and data shown may deviate from the current delivery program of your country. Optional equipment subject to additional charge may be shown. Subject to changes.

Copyright © 2026 Weidemann | www.weidemann.de