

DT10

Track Dumper

The professional machine

The hydrostatic drive system allows for quick and convenient operation and the single-piece engine hood, as well as the optimal arrangement of the service points, make daily maintenance much easier. The rubber tracks and the excellent weight distribution reduce the ground pressure, ensuring more extensive application uses. The variety of skip versions make it a very versatile machine.

MAT: 1000325588

Highlights

- Hydrostatic drive
- Small dimensions
- Hanging suspension-mounted rollers

Technical Data

Hydraulic

Hydraulicpump	Variable displacement and gear pump
Flow rate max.	17.4 gal/mi

Mechanical - Output Details

Travel speed	2.5 m/H

Mechanical Details

Length	70.9 in
Width	31.1 in
Height	53.7 in
Weight	1,499.14 lb
Payload max.	2,204.6 lb
Skip capacity heaped	0.6 yd3
Operating weight (min.-max.)	1,466.1 - 2,017.2 lb

Engine

Cooling	Water-cooling
Engine type	Diesel engine
Cylinder	2.0
Cylinder capacity	29.2 Inch3
Inclined position max.	20.0 °
Effective power	12.9 hp
Nominal Engine speed	3,600.0 1/min
Engine Manufacturer	Kubota
Engine Designation	Z-482
Stroke	68.0 mm
Bore	67.0 mm

Environment Data

Sound level LpA	88.0 dB(A)
Sound level LpA (Standard)	ISO 6396
Sound power LWA, guaranteed	101.0 dB(A)
Sound power LWA (Standard)	ISO 6395

Shipping and Storage

Shipping weight	1,300.7 lb

The illustrations, equipment and data shown may deviate from the current delivery program of your country. Optional equipment subject to additional charge may be shown. Subject to changes.

Copyright © 2026 Wacker Neuson SE | www.wackerneuson.com

Dimensions

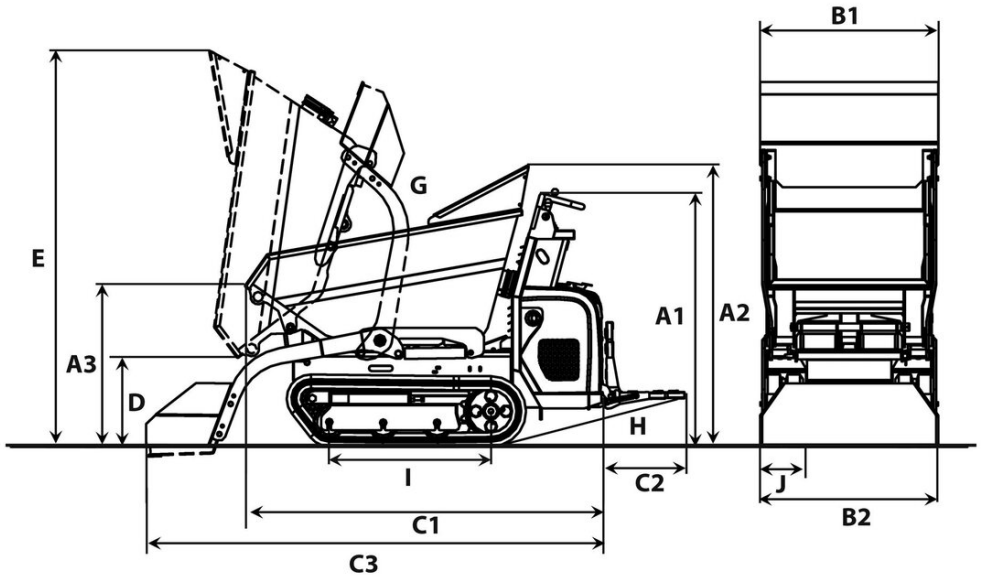

		Front tip skip	High tip skip	Swivel tip skip	Front tip skip	Light goods skip
A1	Height above operator's stand	50.43 in	50.43 in	50.43 in	50.43 in	50.43 in
A2	Height over skip hand guard	53.7 in		51.2 in		
A3	Height front edge of skip	32.2 in	43.7 in	41.1 in	33.45 in	31.99 in
	Height front edge of high tip skip raised		66.5 in			
B1	Width of skip	31.1 in	30.1 in	28.7 in	31.76 in	32.7 in
B2	Width of undercarriage	31.13 in	31.13 in	31.13 in	31.13 in	31.13 in
B7	Width with self-loading equipment	32.7 in	32.7 in			32.7 in
C1	Total length without footboard	70.92 in	66.35 in		74.15 in	71.83 in
C2	Length footboard	15.48 in	15.48 in		15.48 in	15.48 in
C3	Length with self-loading equipment, without footboard	89.32 in	88.26 in			89.71 in
D	Dumping height max.	18.68 in	34.2 in	25.6 in	10.09 in	18.12 in
	Dumping height max., high tip skip raised		55.7 in			
E	Skip height tilted	75.06 in	79.15 in	83.1 in	56.34 in	76.83 in
	Skip height tilted, high tip skip raised		106.3 in			
G	Dumping angle	70 °	82 °	85 °	56 °	70 °
H	Rollback angle footboard	14 °	14 °	14 °	14 °	14 °
I	Length chain stand	34.47 in	34.47 in	34.47 in	34.47 in	34.47 in
J	Track width	7.09 in	7.09 in	7.09 in	7.09 in	7.09 in
K	Dumping width lateral			19.2 in		

The illustrations, equipment and data shown may deviate from the current delivery program of your country. Optional equipment subject to additional charge may be shown. Subject to changes.

Copyright © 2026 Wacker Neuson SE | www.wackerneuson.com