

KT316

Telehandler

THE COMPACT POWERHOUSE

With its combination of compact external dimensions and high payload and engine power, the KT316 telehandler is the compact powerhouse in the Kramer portfolio. The telehandler lifts up to 3,100 kg to a maximum stacking height of 5.83 m. The Deutz engine with a maximum output of 82 kW / 112 hp ensures high machine agility and performance. The extensive standard equipment includes a top speed of 40 km/h, a reversible fan with automatic function and four steering modes with automatic synchronization.

Compactness: Height of 2.15 m and width of 2.09 m for applications in confined spaces

Engine: Powerful Deutz 2.9 liter engine with a maximum performance of 82 kW (112 hp) ensures maximum productivity for demanding tasks

Charging capacity: Continuous 3,100 kg payload up to a maximum stacking height of 5.83 m ensure that heavy loads are moved safely and efficiently

Smart Attach: Hydraulic attachments can be changed quickly, simply, and safely as a result of the optional fully hydraulic quick change plate

Weighing system: Optional, integrated, dynamic weighing system, which enables different goods to be weighed regardless of attachment, load center of gravity and the position of the loading system

Technical Data

Standard engine data

Engine manufacturer	Deutz
Drive output	82 kW
Drive output	112 PS
at max. rpm	2,000 U/min
Cylinder capacity	2,924 cm³
Exhaust standard level	V
Exhaust aftertreatment	DOC / DPF / SCR

Weights

Bucket capacity (standard bucket)	0.90 m³
Payload (max.)	3,100 kg
Payload at max. reach	1,350 kg
Payload at max. stacking height	3,100 kg
Stacking height (max.)	5,835 mm
Payload max. (LSP 500 mm)	3,100 kg
Operating weight	5,200 - 5,900 kg

Filling levels

Tank capacity for fuel	125 l
Tank capacity for hydraulic oil	100 l

Drive system

Travel speed Standard	0-40 km/h
Travel speed Option 1	0-20 km/h
Travel speed Option 2	0-30 km/h
Differential lock	100 % front axle

Hydraulic system

Work hydraulics discharge volume (max.)	109 l/min
Work hydraulics working pressure (max.)	260 bar

Steering

Steering angle max.	40 degree

Noise characteristic values

Guaranteed sound power level LwA (cabin)	101 dB(A)
Measured sound power level LwA	98 dB(A)
Sound pressure level at the operator's ear	76 dB(A)

The illustrations, equipment and data shown may deviate from the current delivery program of your country. Optional equipment subject to additional charge may be shown. Subject to changes.

Copyright © 2026 Kramer-Werke GmbH | www.kramer.de

Dimensions

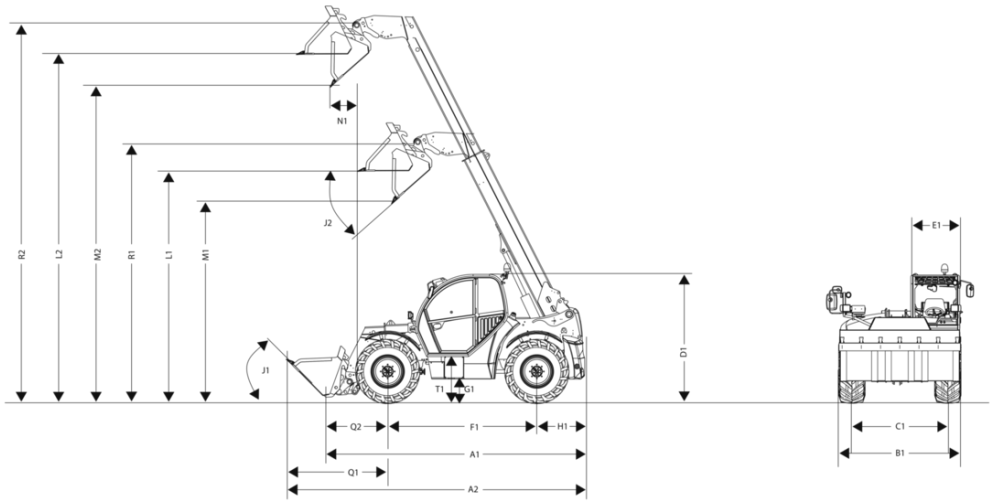

A1	Total length	4,500 mm
A2	Total length with bucket	5,250 mm
B1	Total width without bucket	2,095 mm
C1	rear	1,780 mm
D1	Total height	2,155 mm
D2	Total height with rotating beacon	2,300 mm
E1	Cab width	825 mm
F1	Wheel base center	2,750 mm
G1	Ground clearance under axle and transmission, wading depth	320 mm
H1	Distance center rear wheel to rear	730 mm
I1	Rear approach angle (slope angle)	77.5 °
J1	Dumping angle	45 °
K1	Max. stacking height	5,835 mm
J2	Dumping angle	22 °
L1	Load-over height retracted	3,745 mm
L2	Load-over height extended	5,610 mm
M1	Dumping height retracted	3,205 mm
M2	Dumping height extended	5,070 mm
N1	Dumping width extended	458 mm
Q2	Distance center front wheel bearing quick change frame	1,030 mm
R1	Bucket pivot point retracted	4,245 mm
R2	Bucket pivot point extended	6,110 mm
S1	Turning radius outer edge wheels	3,605 mm
S2	Turning radius outer edge bucket	4,605 mm
T1	Entry height cab floor	660 mm

The illustrations, equipment and data shown may deviate from the current delivery program of your country. Optional equipment subject to additional charge may be shown. Subject to changes.

Copyright © 2026 Kramer-Werke GmbH | www.kramer.de

Standard components

Cab

- ROPS/FOPS tested, sound proofed, low-vibration, comfortable cabin with 360-degree all-round visibility and colored full-glazing.
- Windshield wipers in front and rear, with intermittent wipers in front, indicator reset
- Indicator for interior cab lighting, door divided, upper door section adjustable to two positions by 180°
- Solid panoramic front windshield without a transversal spar for optimal visibility
- Rear window can be opened
- Hanging pedals and removable floor mats
- Mechanically-sprung comfort operator’s seat Grammer MSG85/721
- Electronically pilot-operated multifunctional joystick with integrated travel direction selector and telescopic function
- Color-coded switches for hydraulic, electric, driving, and safety features
- Heater with 3-speed fan, 4 air vent and defroster nozzles
- 12 V socket
- Bottle holder, sun blind, storage compartment under the operator's seat, clothing hook
- Work lights 1x LED Basic on front (1000 lm), work light 1x LED Basic on rear (1000 lm)
- Lighting according- road traffic regulations

Steering and work hydraulics

- Gear pump with load pressure independent flow distribution (LUDV)
- 4 steering modes incl. electric changeover and automatic synchronization as standard
- 3. Control circuit and telescopic function with proportional control
- Permanent function 3. Control circuit can be switched on via keypad
- Overload and "Smart Handling" driver assistance system (manual mode, bucket and stacking mode)

Engine

- Coarse-mesh, horizontal combination cooler for engine water, hydraulic oil and charge air
- Reversible fan incl. automatic function
- Cyclone air filter with integrated safety cartridge and pre-separator
- Manual battery disconnect switch

Drive system and axles

- Stepless, hydrostatic transmission with load-dependent, electronic transmission control
- Maximum speed 40 km/h
- Temporary reversing warning device
- Mechanical parking brake

Vehicle design and kinematics

- Torsion-resistant steel frame in box section design
- Telescopic arm is guided by 13 externally adjustable sliding elements
- End position damping in the telescopic cylinder

Documentation

- Operator's manual, service manual

Options

Operator's cab & Cabine

- Cab window right and rear, heated with automatic shut-off
- Air-conditioning system
- Interior mirror, including bracket for cell phone (CCA_PHONHOLD_002)
- Mechanically sprung operator's seat with fabric cover (MSG85/721) - (standard)
- Air-sprung operator’s seat (MSG95AL/722)
- Adjustable steering column (height and incline)
- Radio-ready (antenna, speaker)
- Radio system DAB+ with BT + hands-free installation (radio, antenna, speaker)
- 7” inch display (incl. oil volume adjustment, sensitivity of the joystick)
- Rear-view camera
  - only in association with
    - Display 7 inch inc. Oil volume adjustment and sensitivity of the loading system
- Front view camera right side

The illustrations, equipment and data shown may deviate from the current delivery program of your country. Optional equipment subject to additional charge may be shown. Subject to changes.

Copyright © 2026 Kramer-Werke GmbH | www.kramer.de

Lighting

- (Orange) LED rotating beacon
- LED Basic work light (1000 Lumen)- 1x additional unit on front, 1x unit on rear
- LED Basic lighting package (1000 Lumen) - 7 additional work lights - 1x front, 1x rear, 1x left, 2x right, 2x outer arm”
- 2x LED Basic work light (1000 Lumen) on side of telescopic arm (outer pipe)
- Additional lighting LED Basic rear (1000 Lumen)

Approval, road traffic

- Data confirmation (ABE) for self-propelled work machine*
- EC certificate of conformity for tractors (167/2013/EC - Class T1), without data confirmation
- EC certificate of conformity for tractors (167/2013/EC - Class T1), with data confirmation - only for Germany

*Germany, Luxembourg, Netherlands, Austria, Slovakia, the Czech Republic, Switzerland, Estonia, Latvia, Lithuania, Hungary

Drive system and axles

- Four types of steering – (standard)
- Hydrostatic 20 km/h
- Hydrostat 30 km/h
- Hydrostatic 40 km/h – (standard)
- Hydrostatic 40 km/h incl. reduction in rpm Smart Driving
- Driving mode Power/Eco (standard)
- Driving mode Power/Eco/Pedal/CSD
  - includes:
    - Low-speed control and manual throttle
- Vacuum pre-filter
- Cyclone pre-filter
- Cyclone pre-filter Turbo III
- Reversible fans incl. automatic function
- 100% differential lock in the front axle – connectible
- Pre-heating of coolant, fuel, hydraulic oil
- Automatic stop (Engine off through seat contact switch)

Tires

- Mitas 340/80–20 MPT-01 – traction profile – ET10
- Mitas 405/70–20 MPT 01 – traction profile – ET35
- Mitas 405/70–24 MPT 01 – traction profile – ET50
- Michelin 400/70 R20 XMCL – traction profile – ET50
- Michelin 400/70 R24 XMCL – traction profile – ET50
- Michelin 400/70R20 BIBLOAD – multi-purpose profile – ET50
- Firestone 400/70 R20 Duraforce Utility – multi-purpose profile – ET50
- Alliance 400/70 R20 Multiuse 550 – municipal profile – ET50
- Trelleborg 400/70R20 TH400 ET+50
- Trelleborg 400/70R20 TH500 ET+50
- Trelleborg 400/70R24 TH400 ET+50

Loading system & Quick change plates

- Load stabilizer (vibration damper) incl. automatic function
- Automatic bucket return (ABR), including vibration function of the tipping cylinder
- Tipping cylinder lock
- Telescopic arm dirt wiper
- Mechanical quick coupler system, Kramer System (telescopic “small” – pivoting angle 132°) – (standard)
  - not with:
    - Pressure release of 3rd control circuit
- Hydraulic quick coupler system, Kramer System (telescopic “small” – pivoting angle 132°)
- Hydraulic quick coupler system, Kramer System (telescopic “small” – pivoting angle 150°)
- Hydraulic quick coupler system, Kramer System (telescopic “small” – pivoting angle 150°)
- Fully hydraulic quick coupler system “Smart Attach”, Kramer System (telescopic “small” – pivoting angle 150°)
  - only in combination with:
    - Pressure release of 3rd control circuit
- Hydraulic quick coupler system, Weidemann System (pivoting angle 150°)
- Hydraulic quick coupler system, EURO System (pivoting angle 150°)
- Hydraulic quick coupler system, Manitou System (pivoting angle 150°)
- Hydraulic quick coupler system, Matbro / John Deere System (pivoting angle 150°)

The illustrations, equipment and data shown may deviate from the current delivery program of your country. Optional equipment subject to additional charge may be shown. Subject to changes.

Copyright © 2026 Kramer-Werke GmbH | www.kramer.de

Hydraulics

- Filling of the hydraulic system with environmentally friendly and biodegradable hydraulic oil
- Oil volume adjustment for auxiliary hydraulic control circuits
  - included in:
    - 7-Inch display (incl. oil volume adjustment and loading system sensitivity)
- Pressure release of 3rd control circuit
- Unpressurized return line, on the outer arm, incl. leak oil line
- Diverter valve in front on 3rd control circuit
- Tipper connection
- Three-point lifting unit, category II
- Rear power take-off 540 rpm
  - only in combination with:
    - Three-point lifting unit, category II
    - Automatic attachment coupling 38 mm – fixed to frame
- Control circuit, rear attachment, double-acting
  - only in combination with:
    - Tipper connection

Electrical system

- Plug receptacle for front attachments, 7-pole
- Outlet for rear attachments, 7-pole

Safety options

- Temporary reversing warning sound - (standard)
- Reverse alarm (acoustic)
- Drive train cover
- Underbody protection
  - only in association with
    - Drive train cover
- Immobilizer system, integrated in the ignition switch key
- Fire extinguisher (2 kg)
- Protective grating for front windshield, removable (not approved for machine travel on public roads)
  - not in conjunction with:
    - Red/white warning stripes (in accordance with DIN 30710)
- Red/white warning stripes (in accordance with DIN 30710)
  - Not with:
    - Protective grating for front windshield, removable (not approved for machine travel on public roads)
- Seatbelt alarm
- CESAR DataTag ID - Only for countries that use this system within their legal institutions, such as Great Britain

Other

- Single-color RAL custom paint finish (gray parts not included)*
- Protective measures against corrosive agents (salt and fertilizer)
  - only in combination with:
    - Dry lubrication (smooth paint) Telescopic arm
    - Telescopic arm dirt wiper
    - Cover for the drive train
- Dry lubrication (smooth paint) Telescopic arm (not for AUS/NZ)
- (Fully automatic) central lubrication unit

- Pre-configured central lubrication system (lubrication line positioned in the arm)
- EquipCare Dual ID
- Dynamic weighing system
  - only in combination with:
    - Load stabilizer (vibration damper) incl. automatic function
    - 7” inch display (incl. oil volume adjustment, joystick sensitivity)
    - In addition, one of the following quick hitch systems must be selected:
      - Kramer hydraulic 150°, Kramer Smart Attach 150°, EURO
      - Kramer hydraulic (telescopic “large” – pivoting angle 150°)
      - Manitou hydraulic, (pivoting angle 150°)
      - Matbro / John Deere hydraulic, (pivoting angle 150°)
      - Recommended: only in combination with central lubrication system!

*We reserve the right to decline paint finishes that exhibit similarities to protected colors or color combinations of other manufacturers!

The illustrations, equipment and data shown may deviate from the current delivery program of your country. Optional equipment subject to additional charge may be shown. Subject to changes.

Copyright © 2026 Kramer-Werke GmbH | www.kramer.de

Ball hitches

- Automatic attachment coupling 38 mm - fixed to frame
- Towing hitch
- Auto hitch attachment coupling (incl. Hydraulic control and tipper connection)
- Mechanical attachment coupling 32 mm - fixed to frame
- Bearing block for attachment couplings, height-adjustable (application for attachment coupling, height-adjustment required)
- Automatic 38 mm attachment coupling application for bearing block, height-adjustable
- Ball head coupling (K50) application for bearing block, height-adjustable, extended
- Mechanical attachment coupling application for bearing block, height-adjustable - 32 mm
- Automatic attachment coupling application for bearing block, height-adjustable - 32 mm
- Piton-Fix application for bearing block, height-adjustable
- Mirror for attachment coupling
- Hydraulic trailer brake valve (2-line system)

Extended warranties

- Security 24 (2000 h)
- Security 36 (3000 h)
- Security 48 (4000 h)
- Security 60 (5000 h)

The illustrations, equipment and data shown may deviate from the current delivery program of your country. Optional equipment subject to additional charge may be shown. Subject to changes.

Copyright © 2026 Kramer-Werke GmbH | www.kramer.de