

SM120

Utility Track Loader, Productivity Package

Do More with Less

The SM120 uses Wacker Neuson's ergonomic mini-loader controls, while maintaining operator comfort features such as padding and a spring suspension for a better ride and added stability. The productivity package puts major workgroup controls literally at the operator's finger tips, allowing for function shifting on the fly. The high hinge pin of the SM120 provides a 5'3" bucket dump height and allows for easy loading into high sided trucks and dumpsters. The wide (11") track width provides among the lowest ground pressures on the market, minimizing incidental damage to the work site.

MAT: 1000506634

Highlights

- All Day Comfort
- Extra Wide Tracks
- Switch Functions On the Fly
- Ride Control

Technical Data

Hydraulic

Flow rate	12.9 gal/mi
Auxiliary hydraulics relief pressure	3,291.5 psi

Mechanical - Output Details

Ground Pressure	3.9 psi
Travel speed	5.2 m/H

Mechanical Details

Overall Length without bucket	84.3 in
Overall Length with Bucket	108.0 in
Overall width without bucket	41.0 in
Height	58.2 in
Bucket Hinge Pin Height	85.7 in
Maximum bucket roll back at ground	25.0 °
Bucket roll back at maximum height	92.0 °
Angle of departure	25.0 °
Bucket dump height at maximum height	62.8 in
Bucket dump angle at maximum height	42.0 °
Operating weight	3,754.5 lb
Underclearance	7.8 in
Length of Track on Ground	43.0 in
Dump reach at maximum height	21.9 in
Track Width	11.0 in

Engine

Cooling	Water-cooling
Engine type	Diesel engine
Cylinder	3.0
Cylinder capacity	77.3 Inch3
Power rating max.	24.8 hp
Operating power	24.7 hp
Operating Engine speed	2,600.0 1/min
Maximum torque	63.0 lb/ft
Engine Manufacturer	Yanmar
Engine Designation	3TNV80 FT

Operating Fluids

Fuel Tank capacity	16.9 gal US

Chassis

Tip Load	3,503.1 lb
Rated Operating Capacity at 50% Tip Load	1,752.7 lb

The illustrations, equipment and data shown may deviate from the current delivery program of your country. Optional equipment subject to additional charge may be shown. Subject to changes.

Copyright © 2026 Wacker Neuson SE | www.wackerneuson.com

Rated Operating Capacity at 35%	1,225.8 lb	Tip Load	

The illustrations, equipment and data shown may deviate from the current delivery program of your country. Optional equipment subject to additional charge may be shown. Subject to changes.

Copyright © 2026 Wacker Neuson SE | www.wackerneuson.com

Available engines

Yanmar 3TNV80 FT

Cylinder capacity	77.3 Inch3
Power rating max.	24.8 hp
Maximum torque	62.7 lb/ft
Cooling	Water-cooling
Engine type	Diesel engine
Cylinder	3
Engine Manufacturer	Yanmar
Engine Designation	3TNV80 FT

The illustrations, equipment and data shown may deviate from the current delivery program of your country. Optional equipment subject to additional charge may be shown. Subject to changes.

Copyright © 2026 Wacker Neuson SE | www.wackerneuson.com

Dimensions

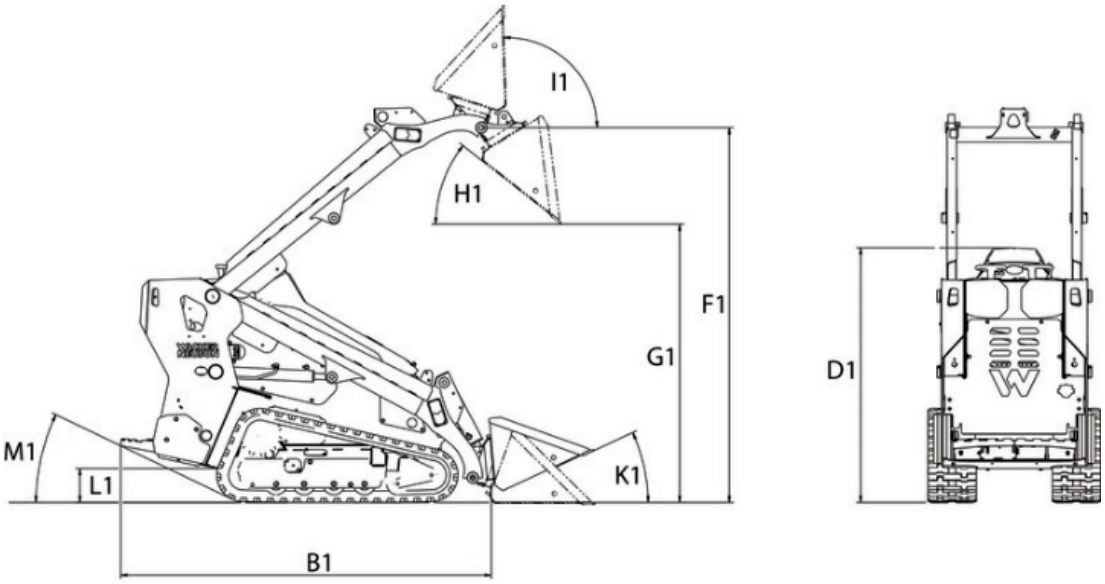

B1	Overall length without bucket	84.7 in
D1	Overall height	58.2 in
F1	Hinge pin height	85.6 in
G1	Dump height max.	63.6 in
K1	Bucket rollback at ground level	25 °
I1	Bucket rollback at max. stroke height	92 °
H1	Dump angle	38.2 °
L1	Ground clearance	7.8 in
M1	Angle of departure	25.6 °

The illustrations, equipment and data shown may deviate from the current delivery program of your country. Optional equipment subject to additional charge may be shown. Subject to changes.

Copyright © 2026 Wacker Neuson SE | www.wackerneuson.com