

TH412e

Telehandler

Electric, environmentally-friendly, and powerful

The Th412e is the first pure electrically-operated telehandler by Wacker Neuson. Its power ratings correspond to those of a conventional diesel-operated machine. The installed 96-Volt lithium-ion battery is available in two power ratings so that the running and charging times can be optimally coordinated with the work requirements. The TH412e works on-site completely free from exhaust gases and with significantly lower noise emissions. For the end user, this means greater flexibility in application, environmental protection and significant savings with operating costs. As a result, features such as compact dimensions, all wheel steering, low center of gravity, and excellent stability are likewise true of the electrically-driven machine.

MAT: 1000458039

Highlights

- Powerful lithium-ion battery
- Easy charging options
- Digital display
- Electric parking brake
- Compact dimensions in the 2 x 2 m class

Technical Data

Standard battery

Battery technology	Lithium-ion
Battery voltage class	96 V
Battery capacity	18.0 kWh
Battery weight	186 kg
On-board charging capacity (max.)	6 kW
Loading time (0-100%)	3,2 - 7,5* h
Loading time (20-80%)	1,8* h
Running time up to	3,1** h

Battery Option 1

Battery technology	Lithium-ion
Battery voltage class	96 V
Battery capacity	28.0 kWh
Battery weight	244 kg
On-board charging capacity (max.)	6 kW
Loading time (0-100%)	5,5 - 11,5* h
Loading time (20-80%)	2,7* h
Running time up to	5,2** h

Electric motor

Motor traction drive (ECE R085)	33,1 kW
Motor work hydraulics (ECE R085)	21.2 kW

Electrical system

Operating voltage	12 V

Weights

Payload (max.)	1,250 kg
Operating weight	2,750 - 3,100 kg

Driver's cab

Driver's cab	Cab

Filling levels

Tank capacity for hydraulic oil	36 l

Drive system

Type of drive	Electrical
drive unit	universal joint shaft
Speed levels	2
Axle	PAL1165
Travel speed Standard	0-15 km/h

The illustrations, equipment and data shown may deviate from the current delivery program of your country. Optional equipment subject to additional charge may be shown. Subject to changes.

Copyright © 2026 Wacker Neuson SE | www.wackerneuson.com

Travel speed Option 1	0-20 km/h
Travel speed Option 2	0-25 km/h
Operating brake	Hydraulically operated disc brake
Parking brake	Electric parking brake with hill-hold function
Differential lock	100 % front axle + rear axle (option)

Hydraulic system

Work hydraulics discharge volume (max.)	41,6 l/min
Work hydraulics working pressure (max.)	220 bar

Kinematics

Lifting cylinder	1
Tipping cylinder	1
Quick change system	hydraulic

Steering

Steering type	Hydrostatic all-wheel steering with end position synchronization
Steering cylinder	2
Steering angle max.	2x38 degree
Oscillating angle of the rear axle	± 7 degree

Noise characteristic values

Average sound power level LwA (cabin)	85.7 dB(A)
Guaranteed sound power level LwA (cabin)	87 dB(A)
Specified sound pressure level LpA (cabin)	73 dB(A)

The illustrations, equipment and data shown may deviate from the current delivery program of your country. Optional equipment subject to additional charge may be shown. Subject to changes.

Copyright © 2026 Wacker Neuson SE | www.wackerneuson.com

Dimensions

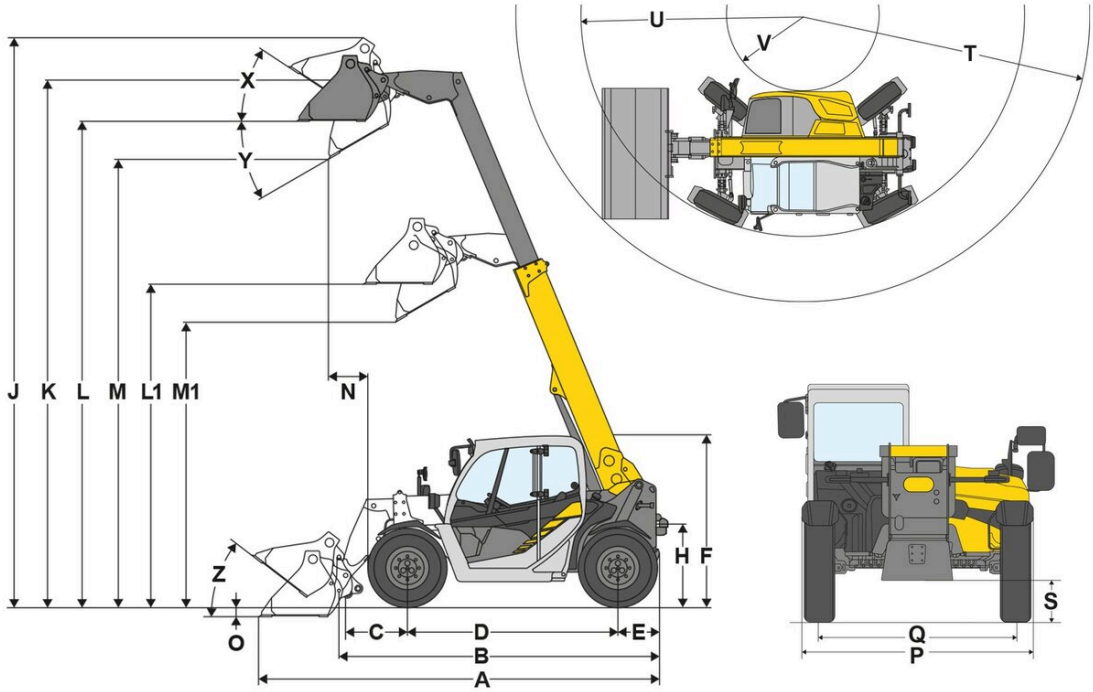

A	Total length	3,944 mm
B	Total length without bucket	2,991 mm
C	Bucket pivot point (to center of axle)	450 mm
D	Wheel base	1,922 mm
E	Rear overhang	427 mm
F	Height with cab	1,995 mm
H	Seat height	978 mm
J	Total working height	5,280 mm
K	Bucket pivot point (max. lift height)	4,537 mm
L1	Load-over height telescopic arm retracted	2,949 mm
L	Load-over height telescopic arm extended	4,163 mm
M1	Dumping height telescopic arm retracted	2,415 mm
M	Dumping height telescopic arm extended	3,630 mm
N	Reach (at M)	557 mm
O	Digging depth	96 mm
P	Total width	1,564 mm
Q	Track width	1,235 mm
S	Ground clearance	294 mm
T	Maximum radius	3,506 mm
U	Radius on the outer edge	2,695 mm
V	Inner radius	951 mm
X	Rollback angle at max. lift height	52 °
Y	Dumping angle	31 °
Z	Rollback angle on ground	44 °

The illustrations, equipment and data shown may deviate from the current delivery program of your country. Optional equipment subject to additional charge may be shown. Subject to changes.

Copyright © 2026 Wacker Neuson SE | www.wackerneuson.com