

WL250

Wheel Loader

Compact and powerful

The WL250 wheel loader has an overall lower height and compact dimensions. As a result, the machine can pass through clearance heights of below 2 m without the need to fold down the operator's canopy. The machine's low center of gravity ensures very good stability and allows the handling of heavy loads. The wheel hub drive also includes the powerful and efficient drive concept, with which all four wheels are directly driven. This purely hydraulic wheel hub drive ensures an increase in efficiency, excellent acceleration, and therefore enables a responsive driving behavior as well as high thrust power.

MAT: 1000528711

Highlights

- Powerful wheel hub drive
- Construction height under 2 m
- Compact dimensions for optimal maneuverability
- Easy entry and exit
- Engine without exhaust after-treatment

Technical Data

Standard engine data

Engine manufacturer	Perkins
Motor type	403 J-17
Cylinder	3
Drive output	18.4 kW
Drive output	25 PS
at max. rpm	2,800 U/min
Cylinder capacity	1,663 cm³
Type of coolant	Water
Exhaust standard level	V
Exhaust aftertreatment	-

Electrical system

Operating voltage	12 V
Battery	77 Ah
Alternator	85 A

Weights

Bucket capacity (standard bucket)	0.21 m³
Operating weight	1,890 - 2,140 kg
Thrust force (max.)	2,069 - 2,582 daN
Lift capacity (max.)	1,779 - 2,395 daN
Tipping load with bucket – machine straight, loading frame horizontal	1,160 - 1,690 kg
Tipping load with bucket – machine pivoted, loading frame horizontal	980 - 1,440 kg
Tipping load with pallet fork – machine straight, loading frame horizontal	890 - 1,260 kg
Tipping load with pallet fork – machine pivoted, loading frame horizontal	740 - 1,080 kg

Driver's cab

Driver's cab	FSD (cabin)

Filling levels

Tank capacity for fuel	18 l
Tank capacity for hydraulic oil	18 l

Drive system

drive unit	Hydrostatic via four wheel hub motors
Speed levels	1
Travel speed Standard	0-20 km/h
Operating brake	Hydrostatic drive system acting on all 4 wheels
Parking brake	Electro-hydraulic multi-disc brake on the rear axle

The illustrations, equipment and data shown may deviate from the current delivery program of your country. Optional equipment subject to additional charge may be shown. Subject to changes.

Copyright © 2026 Wacker Neuson SE | www.wackerneuson.com

Hydraulic system

Drive hydraulics working pressure (max.)	420 bar
Work hydraulics discharge volume (max.)	44,8 l/min
Work hydraulics working pressure (max.)	185 bar

Kinematics

Kinematics type	P
Lifting cylinder	2
Tipping cylinder	1
Quick change system	hydraulic

Steering

Steering type	hydraulically activated articulated pendulum steering
Steering cylinder	1
Oscillating angle	± 8 degree

Noise characteristic values

Average sound power level LwA (operator's canopy)	99.4 dB(A)
Guaranteed sound power level LwA (operator's canopy)	101 dB(A)
Specified sound pressure level LpA (operator's canopy)	84 dB(A)
Average sound power level LwA (cabin)	99.4 dB(A)
Guaranteed sound power level LwA (cabin)	101 dB(A)
Specified sound pressure level LpA (cabin)	80 dB(A)

Other information

FSD = Fahrerschutzdach
EPS = Easy Protection System (klappbares Fahrerschutzdach)
DPF = Dieselpartikelfilter
DOC = Dieseloxidationskatalysator
Kipplastberechnung nachISO 14397

The illustrations, equipment and data shown may deviate from the current delivery program of your country. Optional equipment subject to additional charge may be shown. Subject to changes.

Copyright © 2026 Wacker Neuson SE | www.wackerneuson.com

Dimensions

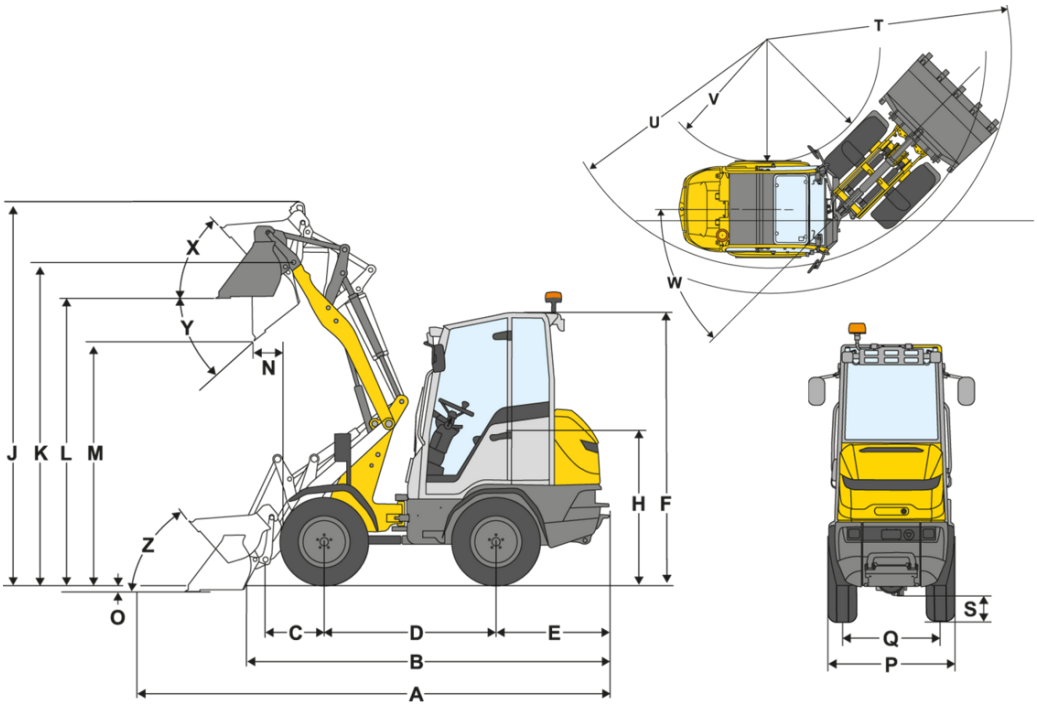

A	Total length	3,830 mm
B	Total length without bucket	3,240 mm
C	Bucket pivot point (to center of axle)	505 mm
D	Wheel base	1,670 mm
E	Rear overhang	955 mm
F	Height with operator's canopy (fixed)	1,980 mm
	Height with cab	1,990 mm
H	Seat height	1,000 mm
J	Total working height	3,050 mm
K	Bucket pivot point (max. lift height)	2,510 mm
L	Load-over height	2,220 mm
M	Dumping height	1,790 mm
N	Reach (at M)	80 mm
O	Digging depth	120 mm
P	Total width	980 mm
Q	Track width	761 mm
T	Maximum external radius	3,100 mm
U	Radius on the outer edge	2,730 mm
V	Inner radius	1,610 mm
W	Articulation angle	43 °
X	Rollback angle at max. lift height	49 °
Y	Dumping angle	45 °
Z	Rollback angle on ground	48 °

The illustrations, equipment and data shown may deviate from the current delivery program of your country. Optional equipment subject to additional charge may be shown. Subject to changes.

Copyright © 2026 Wacker Neuson SE | www.wackerneuson.com