

1501

Wheel Dumper

The multi-talent in mini-format

The twin-lock 4-wheel drive system makes the 1501 a perfect partner for uneven or steep terrain. The articulated pendulum joint adapts to all uneven terrain providing the necessary stability. The high tip skip, equipped as standard, as well as the optionally available swivel tip skip, ensure that no requirements for use are overlooked. A fold-down roll over protection system and the small dimensions make it convenient to transport. The optional reverse alarm, rotating beacon and outside review mirrors enhance safety. Wide leg protection, the fold-down roll-over protection system and the large control station provide safer and intuitive operation.

Highlights

- Swivel tip skip
- High tip skip
- Small dimensions
- Smooth ride characteristics

Technical Data

Hydraulic

Hydraulicpump	ZRP
flow rate	25.0 l/min

Mechanical - Output Details

Travel speed	16.0 km/h

Mechanical Details

Length	3,300.0 mm
Width	1,305.0 mm
Height	2,550.0 mm
Weight	1,320.00 kg
Dry Weight	1,336.0 kg
gross vehicular weight	2,836.0 kg
Payload	1,500.0 kg
skip capacity levelled	650.0 l
Skip capacity heaped	800.0 l
Pendulum angle	15.0 °
Axle load Front	2,000.0 kg
Axle load Rear	1,100.0 kg
Operating weight (min.-max.)	1,336.0 kg

Engine

Engine type	Diesel engine
Cylinder capacity	1,116.0 cm³
Kraftstofftyp	HVO EN15940
Tank capacity	15.0 l
Effective power	18.9 kW
Nominal Engine speed	3,000.0 1/min
Standard (Effective power)	ISO 3046
Engine Manufacturer	Yanmar
Engine Designation	3TNV76-XNSV

Environment Data

Sound power LWA, guaranteed	101.0 dB(A)

Chassis

turning radius	3,300.0 mm
articulation angle	33.0 °
hydraulikpump	Axialpistonpump
flow rate	135.0 l/min

Shipping and Storage

Shipping weight	1,186.0 kg

The illustrations, equipment and data shown may deviate from the current delivery program of your country. Optional equipment subject to additional charge may be shown. Subject to changes.

Copyright © 2026 Wacker Neuson SE | www.wackerneuson.com

Dimensions

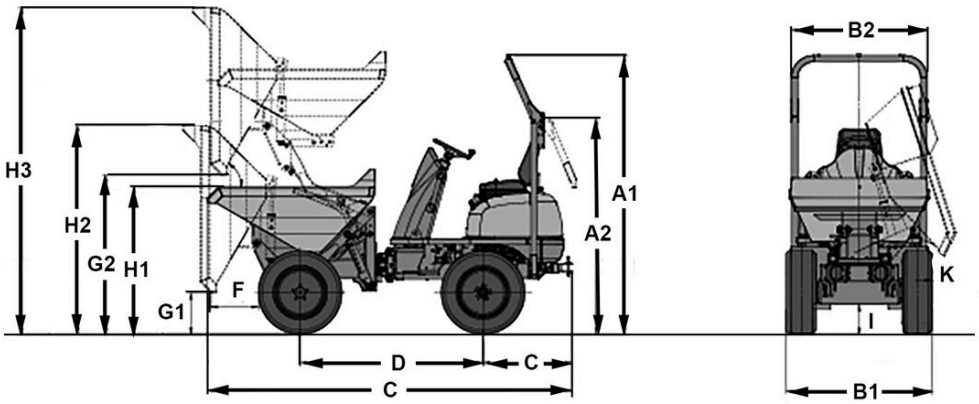

		High tip skip	Swivel tip skip
A1	Height ROPS	2,550 mm	2,550 mm
A2	Height of ROPS tilted	1,960 mm	1,960 mm
B1	Width of vehicle	1,350 mm	1,305 mm
B2	Width of skip	1,225 mm	1,260 mm
C	Total length ROPS	3,300 mm	3,220 mm
D	Wheel base	1,650 mm	1,700 mm
E	Rear overhang	810 mm	810 mm
F	Dumping width	400 mm	280 mm
G1	Dumping height max.	370 mm	680 mm
G2	Dumping height max., high tip skip raised	1,450 mm	
H1	Skip height	1,345 mm	1,300 mm
H3	Skip height tilted, high tip skip raised	2,975 mm	
K	Dumping width lateral		100 mm

The illustrations, equipment and data shown may deviate from the current delivery program of your country. Optional equipment subject to additional charge may be shown. Subject to changes.

Copyright © 2026 Wacker Neuson SE | www.wackerneuson.com