

1001

Wheel Dumper

The all-rounder

The 1001 is the perfect solution for confined spaces. The extremely compact machine is available with a 990 mm width and can fit through narrow passages. Thanks to the typical articulated pendulum joint and the low-maintenance twin-lock 4-wheel drive system, traction remains guaranteed on every terrain. The fold-down roll over protection system provides a high level of safety and still ensures problem-free use and transport in narrow spaces. A wide control station and the intuitive operating concept also provide a high level of comfort on the machine. Easily reachable service accesses top off the overall package.

Highlights

- Twin-lock 4-wheel drive system
- Articulated pendulum joint
- Small dimensions
- Optimum weight distribution
- Smooth ride characteristics

Technical Data

Hydraulic

Hydraulicpump	ZRP
flow rate max.	25.0 l/min

Mechanical - Output Details

Travel speed	14.0 km/h

Mechanical Details

Length	3,080.0 mm
Width	1,180.0 mm
Height	2,580.0 mm
Weight	1,261.00 kg
Payload	1,000.0 kg
skip capacity levelled	415.0 l
Skip capacity heaped	525.0 l
Pendulum angle	15.0 °
Operating weight (min.-max.)	1,230.0 - 1,500.0 kg

Engine

Engine type	Diesel engine
Cylinder capacity	1,116.0 cm³
Kraftstofftyp	HVO EN15940
Effective power	18.9 kW
Nominal Engine speed	3,000.0 1/min
Standard (Effective power)	ISO 3046
Engine Manufacturer	Yanmar
Engine Designation	3TNV76-XNSV

Environment Data

Sound power LWA, guaranteed	101.0 dB(A)

Chassis

turning radius	3,200.0 mm
articulation angle	33.0 °
hydraulikpump	Axialpistonpump
flow rate	84.0 l/min

Shipping and Storage

Shipping weight	1,155.0 kg

The illustrations, equipment and data shown may deviate from the current delivery program of your country. Optional equipment subject to additional charge may be shown. Subject to changes.

Copyright © 2026 Wacker Neuson SE | www.wackerneuson.com

Dimensions

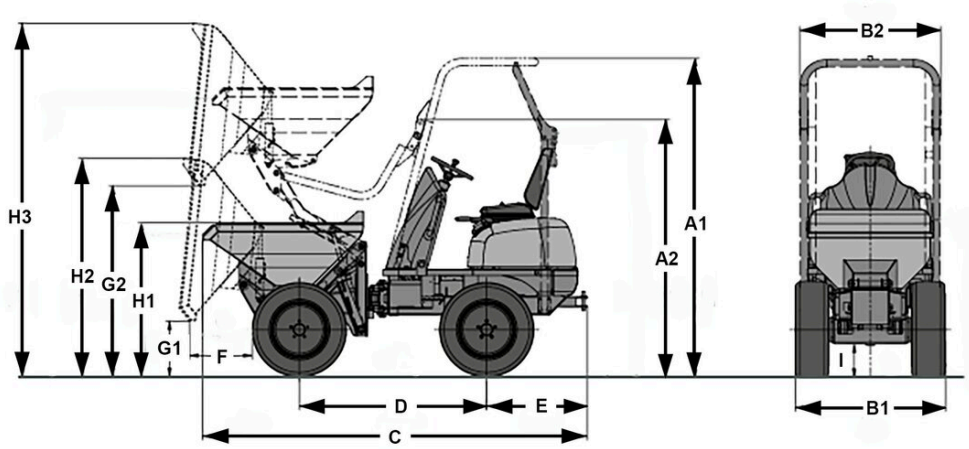

		Standard tyres	Narrow tires	Twin tires
A1	Height ROPS	2,580 mm	2,580 mm	2,580 mm
A2	Height of ROPS tilted	2,080 mm	2,080 mm	1,960 mm
B1	Width of vehicle	1,180 mm	990 mm	1,790 mm
B2	Width of skip	990 mm	990 mm	1,600 mm
D	Wheel base	1,500 mm	1,500 mm	1,510 mm
E	Rear overhang	810 mm	810 mm	810 mm
F	Dumping width	510 mm	510 mm	510 mm
G1	Dumping height max.	465 mm	465 mm	465 mm
G2	Dumping height max., high tip skip raised	1,560 mm	1,140 mm	1,560 mm
H1	Skip height	1,230 mm	1,230 mm	1,230 mm
H2	Skip height tilted	1,770 mm	1,770 mm	1,770 mm
H3	Skip height tilted, high tip skip raised	2,860 mm	2,440 mm	2,860 mm
I	Ground clearance	270 mm	270 mm	270 mm

The illustrations, equipment and data shown may deviate from the current delivery program of your country. Optional equipment subject to additional charge may be shown. Subject to changes.

Copyright © 2026 Wacker Neuson SE | www.wackerneuson.com