

3507

Telehandler

Strong performance in a compact format.

The Kramer 3507 telescopic loader is the ideal telescopic loader for a wide range of applications. The telescopic handler has a compact design, low overall height and small turning radius. Despite its dimensions, it can be used in different ways thanks to the stacking height of 7.0 m and the 3.5 t payload. The 3507 telescopic handler's stepless travel drive up to a maximum of 40km/h, 140l/min load-sensing working hydraulics and intelligent driver assistance systems ensure maximum efficiency. In addition, the ergonomic and functional cabin ensures stress-free work.

Engine: Powerful Deutz engine of the EU exhaust emission stage V with the maximum output of 100 kW (136hp)

Stacking height: Stacking height of 7.0 m with the telescopic loading system

Modern operating concept: 7” LCD display, all-in-one joystick and jog dial control element for easy machine control

Engine bonnet design: Perfect view of the working areas due to the steeply sloping engine bonnet

All-round visibility: Optional cabin height increase by approx. 18 cm with externally positioned FOPS grate. The longitudinal struts tilt outwards according to the line-of-sight of the operator

Technical Data

Standard engine data

Engine manufacturer	Deutz
Drive output	100 kW
Drive output	136 PS
at max. rpm	2,300 U/min
Cylinder capacity	3,621 cm³
Exhaust standard level	V
Exhaust aftertreatment	DOC / DPF / SCR

Weights

Payload (max.)	3,500 kg
Payload at max. reach	1,200 kg
Payload at max. stacking height	2,200 kg
Stacking height (max.)	7,000 mm
Payload max. (LSP 500 mm)	3,500 kg
Operating weight	6,170 - 7,500 kg
Thrust force (max.)	50 kN
Lift capacity (max.)	43 kN

Filling levels

Tank capacity for fuel	100 l
Tank capacity for hydraulic oil	100 l
Tank capacity for urea solution	9.5 l

Drive system

Travel speed Standard	0-30 km/h
Travel speed Option 1	0-20 km/h
Travel speed Option 2	0-40 km/h
Differential lock	100% connectible in the front axle (Option)

Hydraulic system

Work hydraulics discharge volume (max.)	140 l/min

Steering

Steering angle max.	38 degree

Noise characteristic values

Guaranteed sound power level LwA (cabin)	101 dB(A)
Measured sound power level LwA	99.2 dB(A)
Sound pressure level at the operator's ear	72 dB(A)

The illustrations, equipment and data shown may deviate from the current delivery program of your country. Optional equipment subject to additional charge may be shown. Subject to changes.

Copyright © 2026 Kramer-Werke GmbH | www.kramer.de

Dimensions

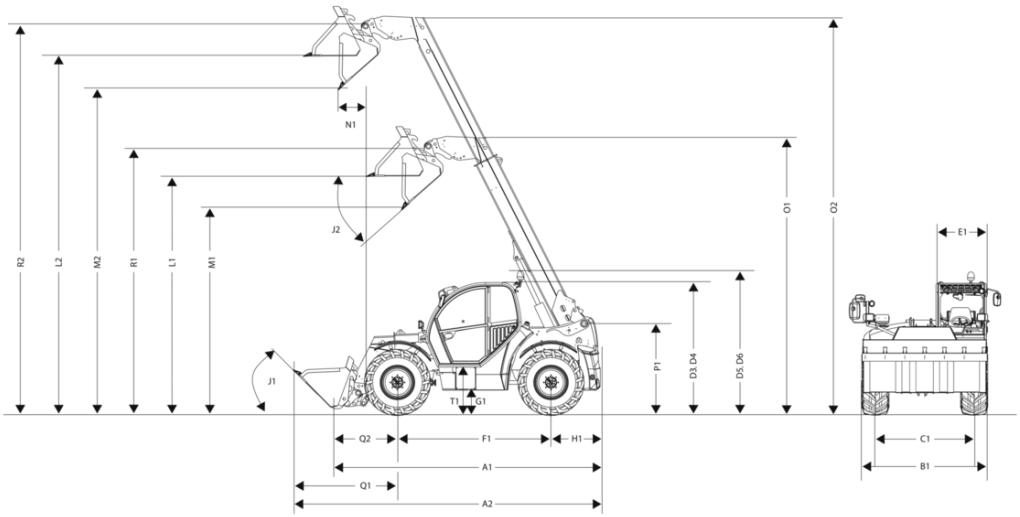

A1	Total length	4,880 mm
A2	Total length with bucket	5,600 mm
B1	Total width without bucket	2,285 mm
C1	rear	1,880 mm
D3	Total height of low cab	2,310 mm
D4	Total height of high cab	2,490 mm
D5	Total height of low cab with rotating beacon	2,540 mm
D6	Total height of high cab with rotating beacon	2,720 mm
E1	Cab width	990 mm
F1	Wheel base center	2,850 mm
G1	Ground clearance under axle and transmission, wading depth	415 mm
H1	Distance center rear wheel to rear	740 mm
I1	Rear approach angle (slope angle)	60 °
J1	Dumping angle	49 °
K1	Max. stacking height	7,000 mm
J2	Dumping angle	41 °
L1	Load-over height retracted	4,520 mm
L2	Load-over height extended	6,820 mm
M1	Dumping height retracted	4,030 mm
M2	Dumping height extended	6,330 mm
N1	Dumping width extended	110 mm
O1	Tele extension length retracted	5,255 mm
O2	Tele extension length extended	7,820 mm
P1	Total height telescopic arm mounting in frame	1,600 mm
Q1	Distance center front wheel to bucket leading edge	1,920 mm
Q2	Distance center front wheel bearing quick change frame	1,290 mm
R1	Bucket pivot point retracted	5,035 mm
R2	Bucket pivot point extended	7,335 mm
S1	Turning radius outer edge wheels	3,840 mm
S2	Turning radius outer edge bucket	5,000 mm
T1	Entry height cab floor	720 mm

The illustrations, equipment and data shown may deviate from the current delivery program of your country. Optional equipment subject to additional charge may be shown. Subject to changes.

Copyright © 2026 Kramer-Werke GmbH | www.kramer.de

Standard components

Cab

- ROPS/FOPS tested, sound proofed, vibration-damped, comfortable cabin with 360 degree all-round visibility
- Windshield wipers in front and rear, with intermittent wipers in front, indicator reset
- Indicator for interior cab lighting, door divided, upper door section adjustable to two positions by 180°
- Rear window can be opened
- Telescoping and adjustable tilting steering column
- Hanging pedals and removable floor mats
- Mechanically-sprung comfort operator's seat Grammer MSG85/721
- Electronically pilot-operated multifunction joystick with integrated travel direction selector and telescopic function
- 7" LCD color display to display all vehicle functions; jog dial
- Color-coded switches for hydraulic, electric, driving, and safety features
- Heater with a 3-speed fan, 6 air outlet nozzles, 2 defrosting nozzles
- 12 V outlet, bottle holder, sun shade
- Work light 1x LED on front (1000 lm), work light 1x LED on rear (1000 lm)
- Lighting according to road traffic regulations
- Manual battery isolator switch

Engine

- Coarse meshed combination radiator for engine water, hydraulic oil and charge air
- Wide-opening engine hood, sight glass for hydraulic oil and cooling water
- Maintenance hatch for easy cleaning of the engine compartment

Steering and work hydraulics

- 4 steering modes in standard
- 3. control circuit and telescoping function with proportional control
- Continuous function 3rd control circuit can be switched on via toggle switch
- Oil volume for 3rd control circuit and all optional control circuits is adjustable via the rotary potentiometer
- Second-generation "Smart Handling" overload and driver assistance system (bucket, stacking, and manual modes)
- Test connections for working hydraulics and travel drive

Drive system and axles

- Infinitely variable, hydrostatic transmission with load-dependent, electronic transmission control

Vehicle design and kinematics

- Torsion-resistant steel frame in box profile design
- Telescopic arm guided by 13 sliding elements adjustable from outside
- End position damping in telescopic, lifting and tipping cylinders

Documentation

- Operator's manual, service manual

Options

Operator's cab - Cabine

- Air-sprung operator's seat (MSG95AL/722)
- Left armrest
- Air-conditioning system
- Ventilated storage compartment (cooled with air-conditioning system)
- High cab with heater for optimized all-round visibility (+180mm)
- Interior mirror incl. bracket for cell phone and USB outlet 2-way
- Exterior mirrors electrically adjustable incl. mirror heating with automatic shut-off
- Compact exterior mirror on left
  - not with:
    - Exterior mirrors electrically adjustable incl. mirror heating with automatic shut-off
- Radio-ready (antenna, speaker)
- Radio system (radio, antenna, speakers)
- Front-view camera on right (incl. auxiliary monitor)
- Rear-view camera (integrated in main screen)
- High cabin with heated cabin windows to right and rear

The illustrations, equipment and data shown may deviate from the current delivery program of your country. Optional equipment subject to additional charge may be shown. Subject to changes.

Copyright © 2026 Kramer-Werke GmbH | www.kramer.de

Lighting

- LED rotating beacon (yellow)
- Work light LED (1000 Lumen), 1 additional unit on front, 1 additional unit on rear
- 2 work lights LED (1000 Lumen) on side of telescopic arm (outer pipe)
- LED lighting package (1000 Lumen) - (7 additional work lights - 1x front, 1x rear, 1x left, 2x right, 2x outer arm)
- License plate illumination, including license plate bracket in front

Equipment for road traffic

- Data confirmation (ABE) for self-propelled working machine

Engine - Axles - Steering - Drive system

- Hydrostatic 30 km/h
- Ecospeed 40 km/h incl. Smart Driving

Tires

- Alliance 405/70-24 A-323 – traction profile
- Alliance 460/70R24 A-580 – traction profile

Quick change plates & Loading system

- Load stabilizer (vibration damper)
- Mechanical quickhitch facility, Kramer system (telescopic loader "large") (standard)
- Hydraulic quickhitch facility, Kramer system (telescopic loader "large")

Hydraulics

- Load Sensing work hydraulics, 140 l/min
- Pressure release of 3rd control circuit
- Automatic bucket return (ABR), including vibration function of the tipping cylinder
- Filling of the hydraulic system with environmentally friendly and biodegradable hydraulic oil
- 2-way multi-coupler
  - only in combination with:
    - Pressure release of 3rd control circuit
    - Hydraulic quick coupler system, Kramer System (telehandler “large”)
- 4-way multi-coupler
  - only in combination with:
    - Pressure release of 3rd control circuit
    - Diverter valve in front on 3rd control circuit
    - Hydraulic quick coupler system, Kramer System (telehandler “large”)

Electrical system

- Plug receptacle for front attachments, 4-pole

Safety options

- Immobilizer system, integrated in the ignition switch key
- Underbody protection
  - only in association with
    - Cover for the drive train
- Cover for the drive train
- Fire extinguisher (2 kg)
- Dirt wipers, telescopic arm
- Red/white warning stripes (in accordance with DIN 30710)
- Oil level monitoring (hydraulic oil)
- Tipping cylinder lock
- Tire blow-out protection
- Dry lubrication (smooth paint) of telescopic arm
- Protective grating for windshield, removable (not approved for machine travel on public roads)

Paint

- Custom-made paint finish, one color according to RAL (gray parts are not included) *
- Protective measures for use in aggressive materials (salt and fertilizer use)
  - only in association with
    - Dry lubrication (smooth paint) of telescopic arm
    - Dirt wipers, telescopic arm
    - Cover for the drive train
- Overseas transport protection

* We reserve the right to reject paints that are similar to protected colors or color combinations by other manufacturers.

The illustrations, equipment and data shown may deviate from the current delivery program of your country. Optional equipment subject to additional charge may be shown. Subject to changes.

Copyright © 2026 Kramer-Werke GmbH | www.kramer.de

Other

- Low-speed device and manual throttle
- 100 % differential lock
- Maneuvering hitch
- Vacuum pre-filter
- Cyclone pre-filter
- Cyclone pre-filter Turbo III
- Reversible fans
- Engine pre-heating, fuel, hydraulic oil (230V)

- Re-configured central lubrication system (lubrication line positioned in the arm)
- (Fully automatic) central lubrication unit
- EquipCare Dual ID

Extended warranties

- Security 24 months (2000 h)
- Security 36 months (3000 h)
- Security 48 months (3000 h)
- Security 48 months (4000 h)
- Security 48 months (5000 h)
- Security 60 months (4000 h)
- Security 60 months (5000 h)
- Power-Line (24 months or 2000 h)
- Power-Line (36 months or 3000 h)
- Power-Line (48 months or 3000 h)
- Power-Line (48 months or 4000 h)
- Power-Line (48 months or 5000 h)
- Power-Line (60 months or 4000 h)
- Power-Line (60 months or 5000 h)
- EquipCare 36 months (incl. App & Manager) - (series)

The illustrations, equipment and data shown may deviate from the current delivery program of your country. Optional equipment subject to additional charge may be shown. Subject to changes.

Copyright © 2026 Kramer-Werke GmbH | www.kramer.de